DRAWING MADE IN KOREAN PROJECTION | DIMENSIONS IN MM .

CUSTOMER DRAWING

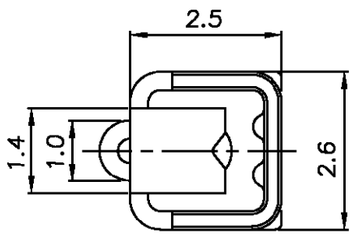

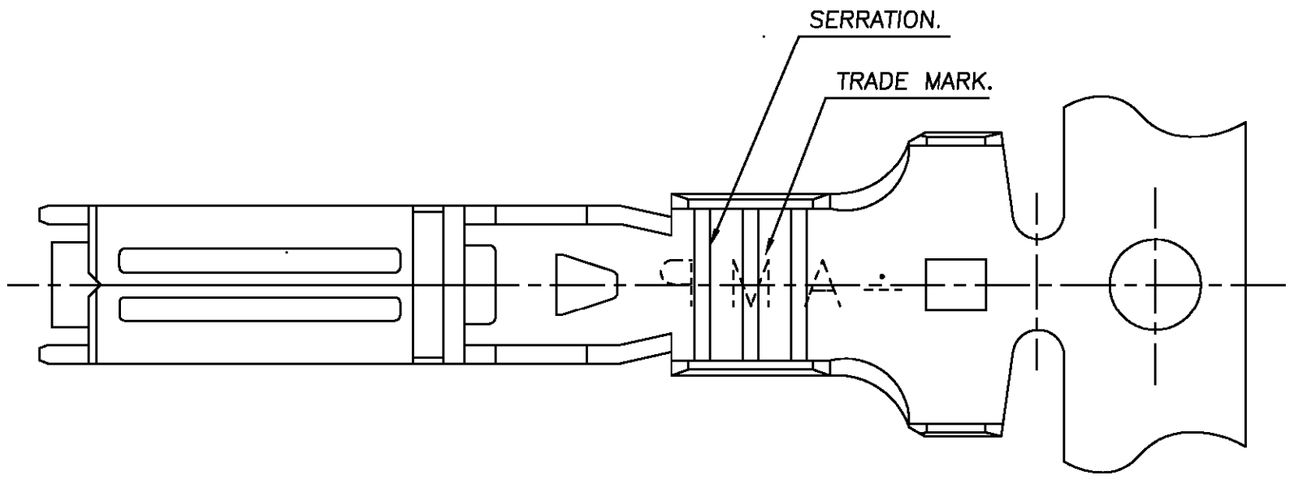

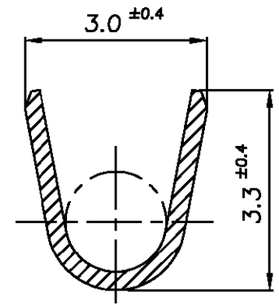

SECTION "C–C"

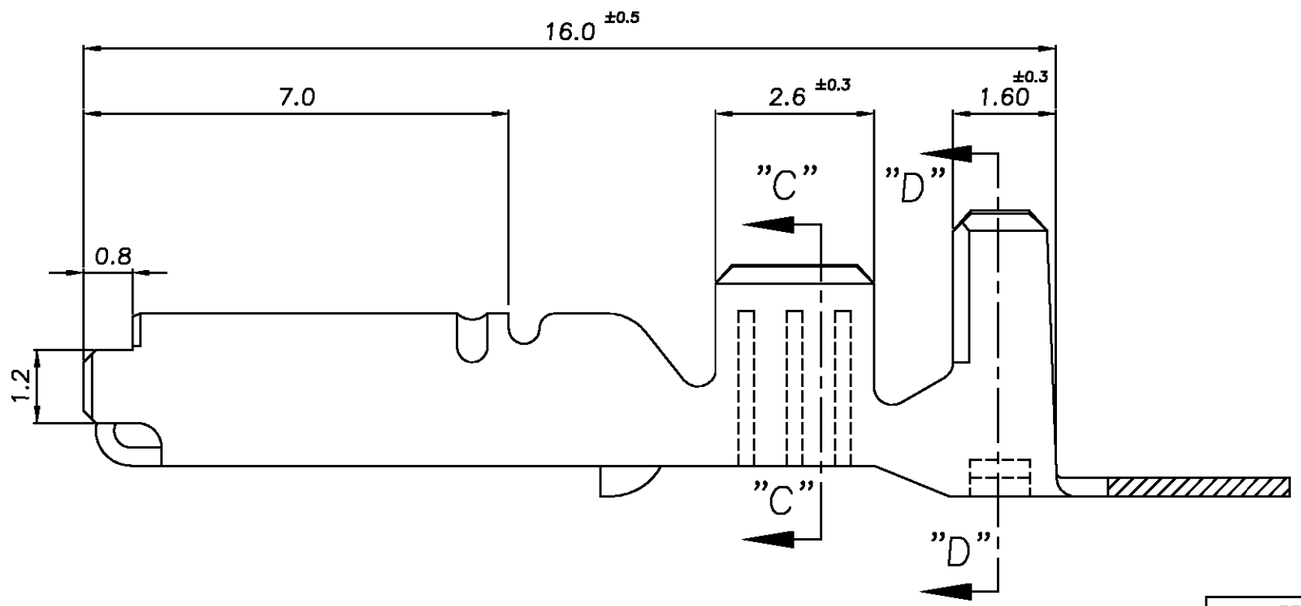

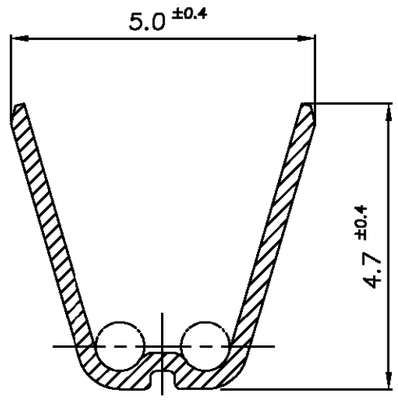

SECTION "D–D"

* NOTES;

1. TAB CONTACT P/N 85099.
2. PRODUCT SPEC. 108–5216.
3. APPLICATION SPEC. 114–5091.
4. CUSTOMER MANUAL. CM–520J(MARK–I)

O	RELEASED (RD96–289)	YM	CS	OCT/08 '96
LTR	REVISION RECORD	DR	CHK	DATE

PRE–TIN	BRASS 0.3t	85098 –1
FINISH	MATERIAL	PART NUMBER

© 1996 AMP MFG KOREA
ALL RIGHT RESERVED AMP PRODUCTS COVERED BY PATENTS AND OR PATENTS PENDING

AMP MFG KOREA
KYUNG SAN PLANT.

WIRE RANGE AWG No. #12 2.0 mmSQ	INSULATION DIA 2.70 DIA.	NAME "070" SERIES RECEPTACLE CONTACT.			
MATERIAL SEE TABLE	FINISH/COLOR SEE TABLE	TOLERANCES 0<XX<10 ±0.2; 10<XX<30 ±0.25; 30<XX<100 ±0.3; ANGLES ±3°	SIZE A3	LOC DS	NUMBER 85098
DR	APP		SCALE 10/1	REV 0	SHEET 1 of 1
CHK	REL				

PRINT DIST.