THIS DRAWING IS UNPUBLISHED. RELEASED FOR PUBLICATION 1997
© COPYRIGHT 1997 BY TYCO ELECTRONICS CORPORATION. ALL RIGHTS RESERVED.

LOC	DIST
A1	-

REVISIONS

P	LTR	DESCRIPTION	DATE	DWN	APVD
	A3	Released as per ECR-07-019955	22.08.07	SK	TS

PN 1-6

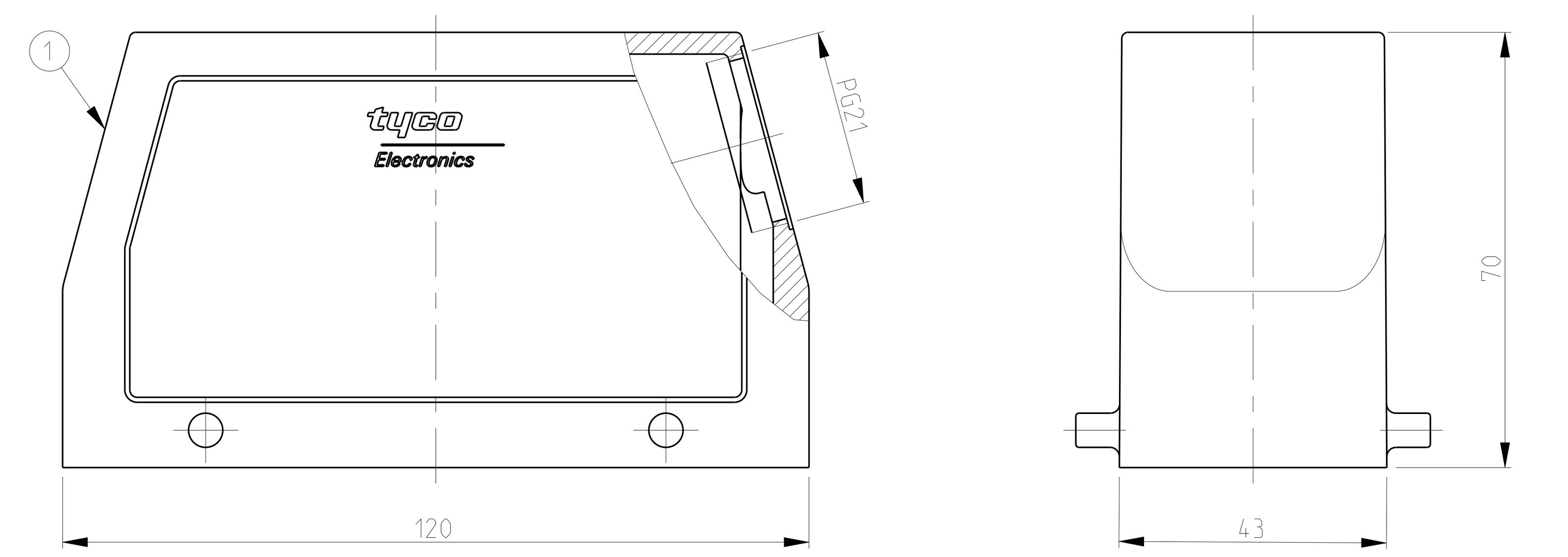

PN 2-7 & 0-1

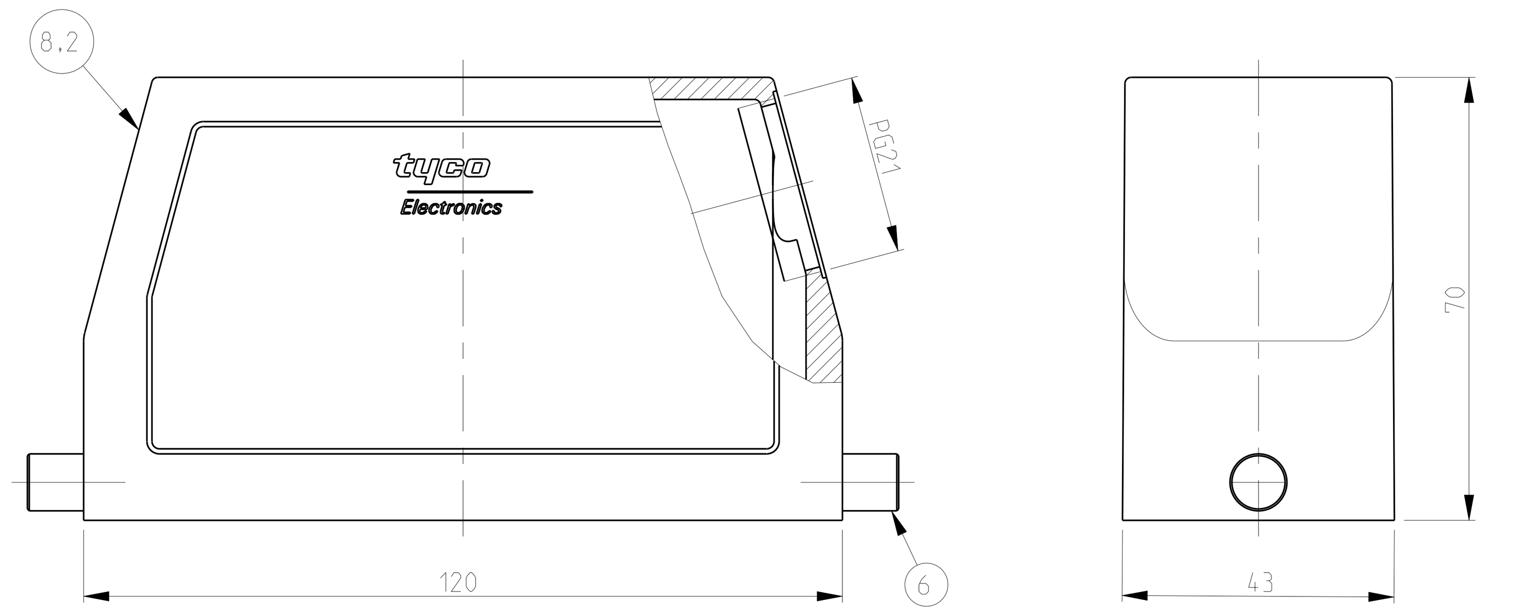

NOTES.

1. Material:Housing:Aluminium Diecasting Alloy
2. Surface:Varnish grey
   -Aluminium oxide+
   Varnish black
3. Varnish on the inside not necessary
4. Packaging
   Quantity 5 Pieces in a box

PN 2-6

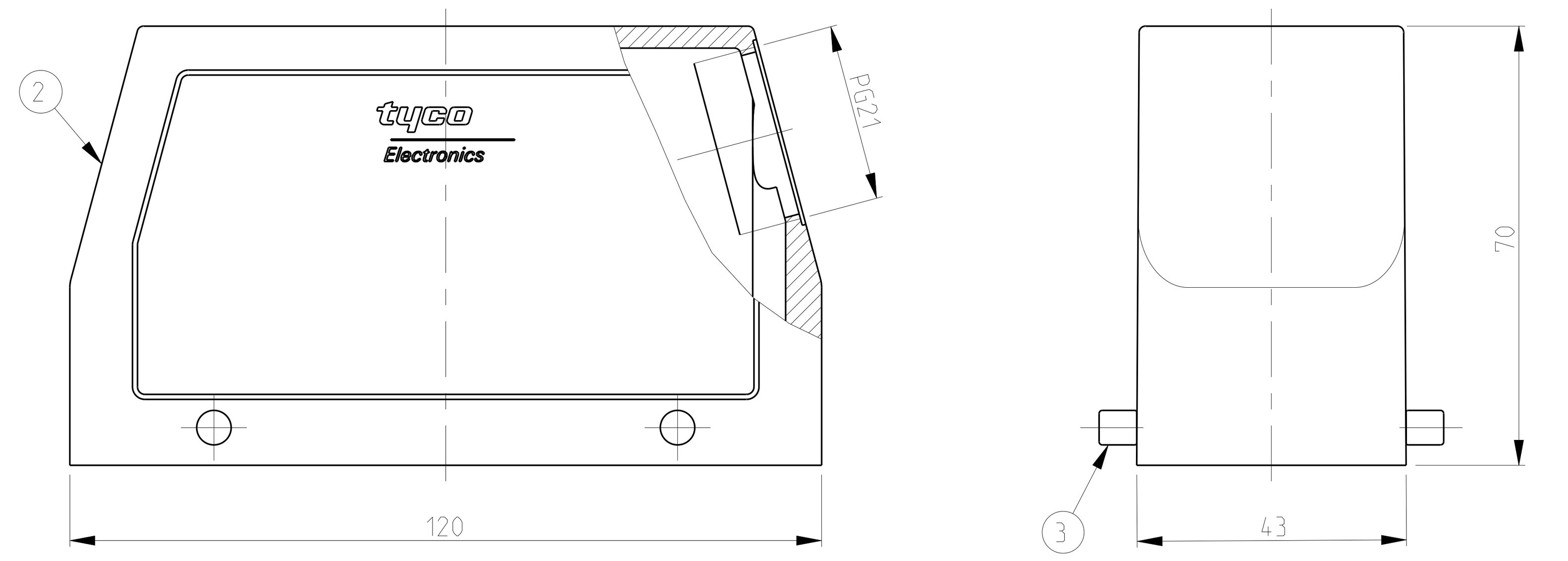

PN 1-3

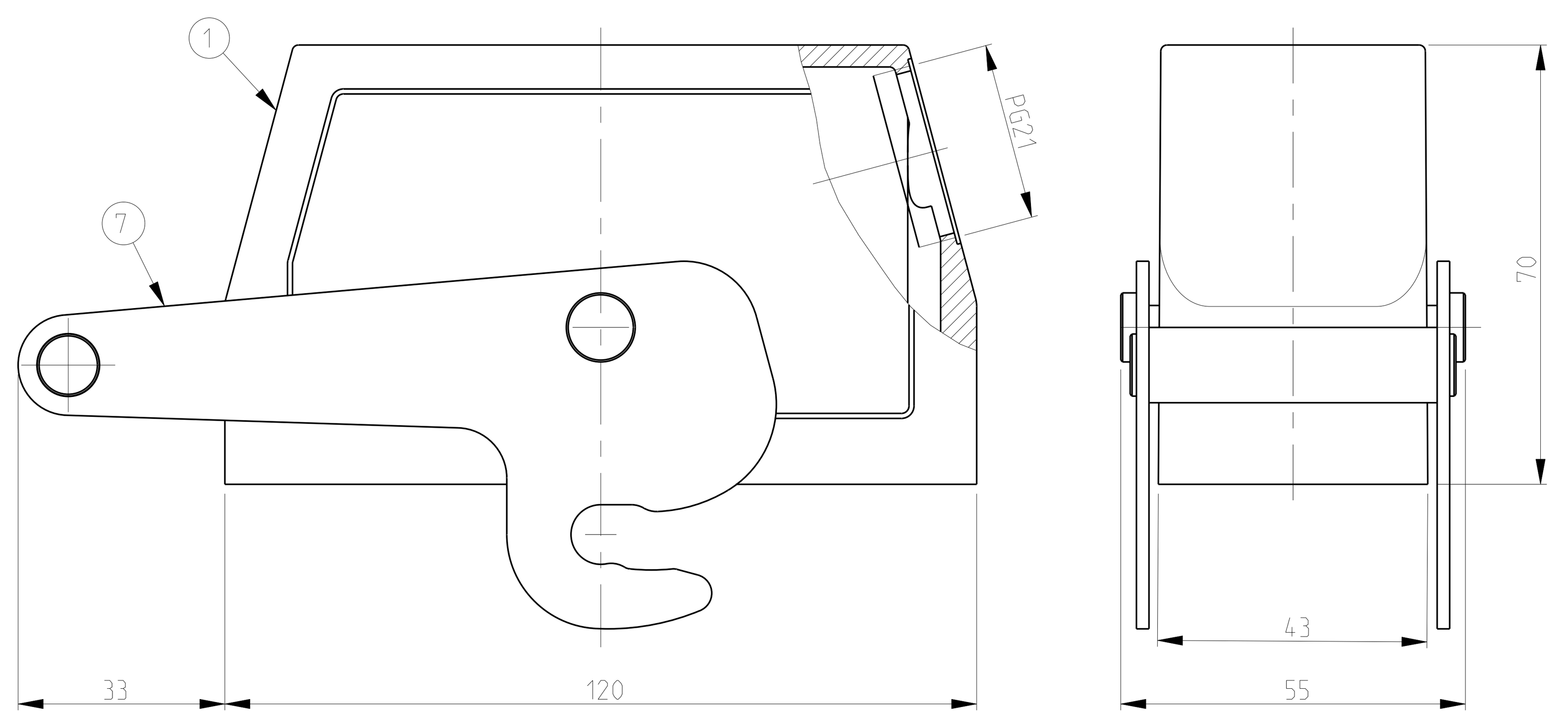

PN 1-1

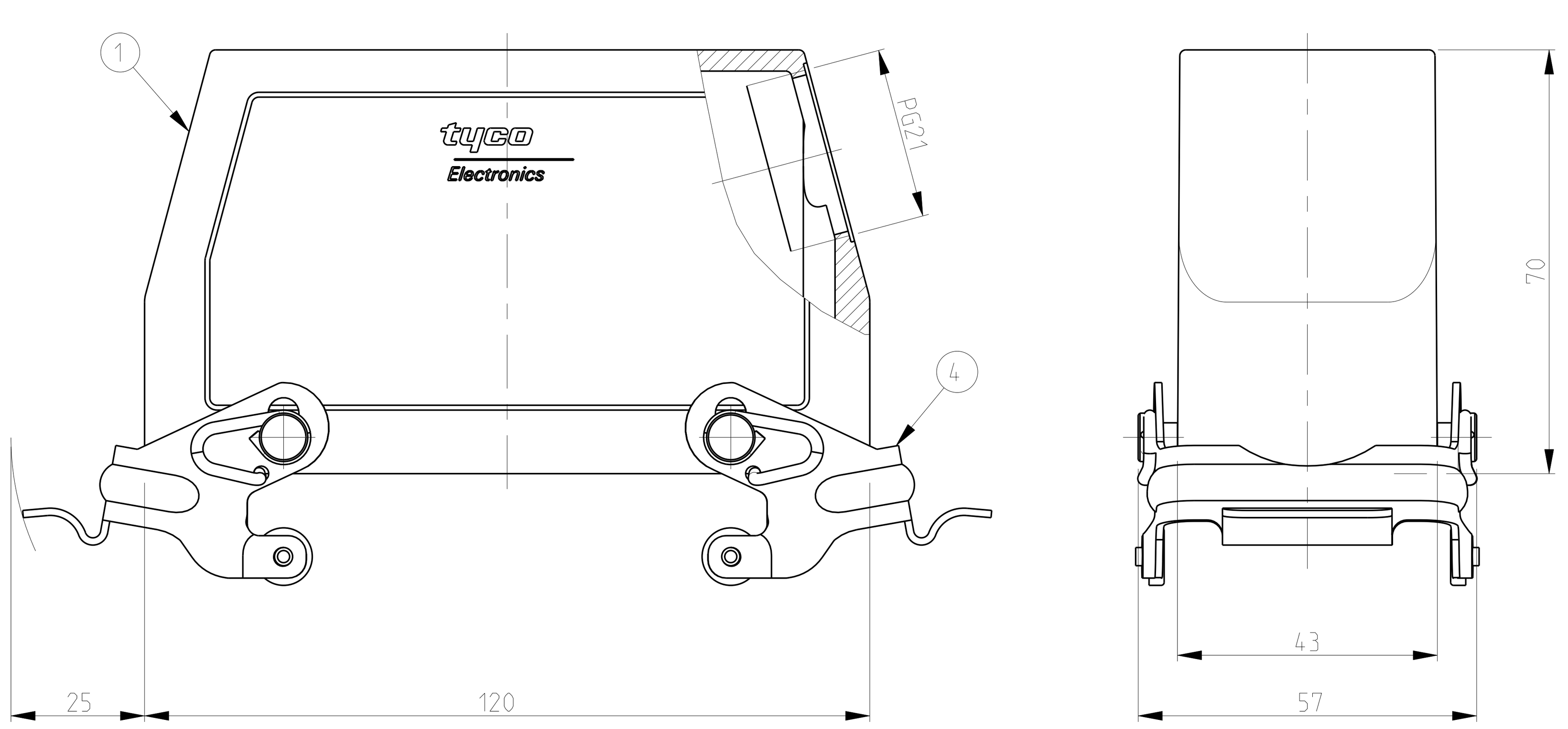

PN 1-7 & 0-2

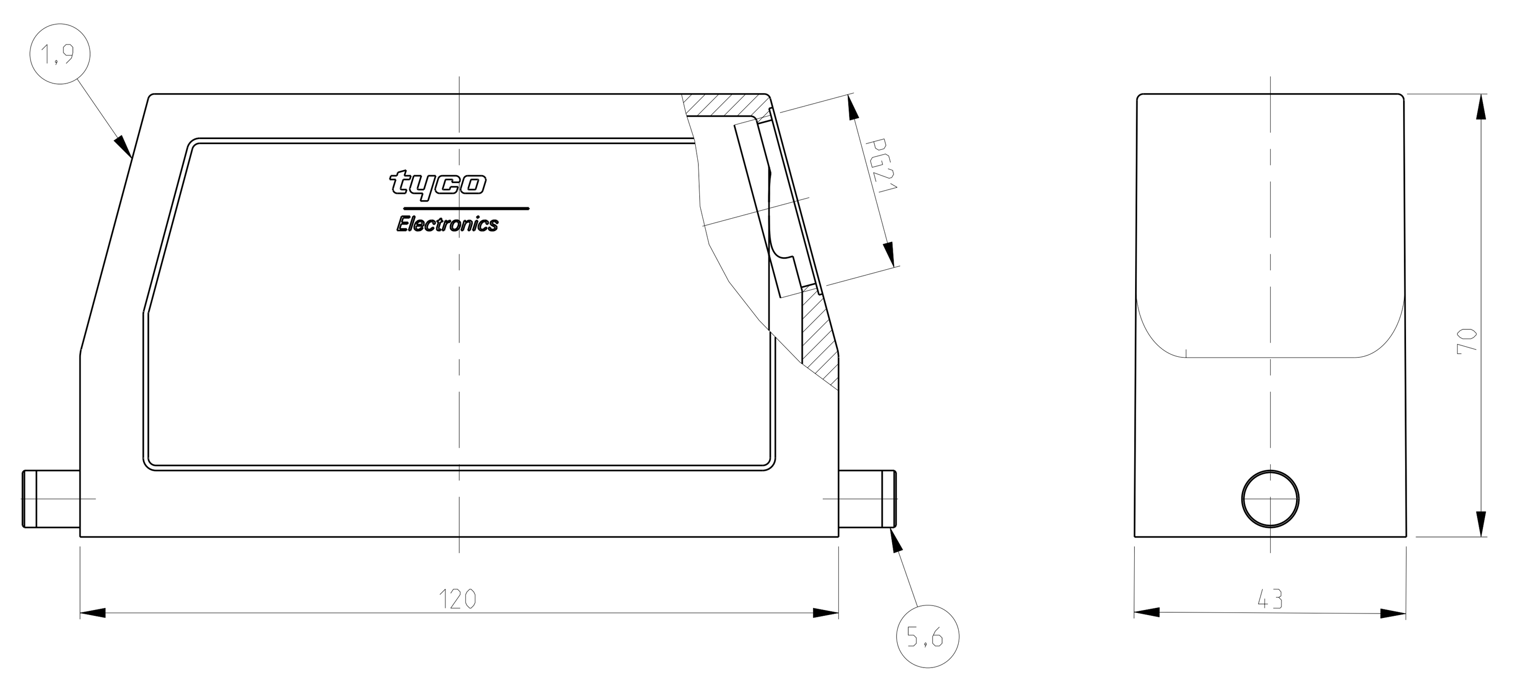

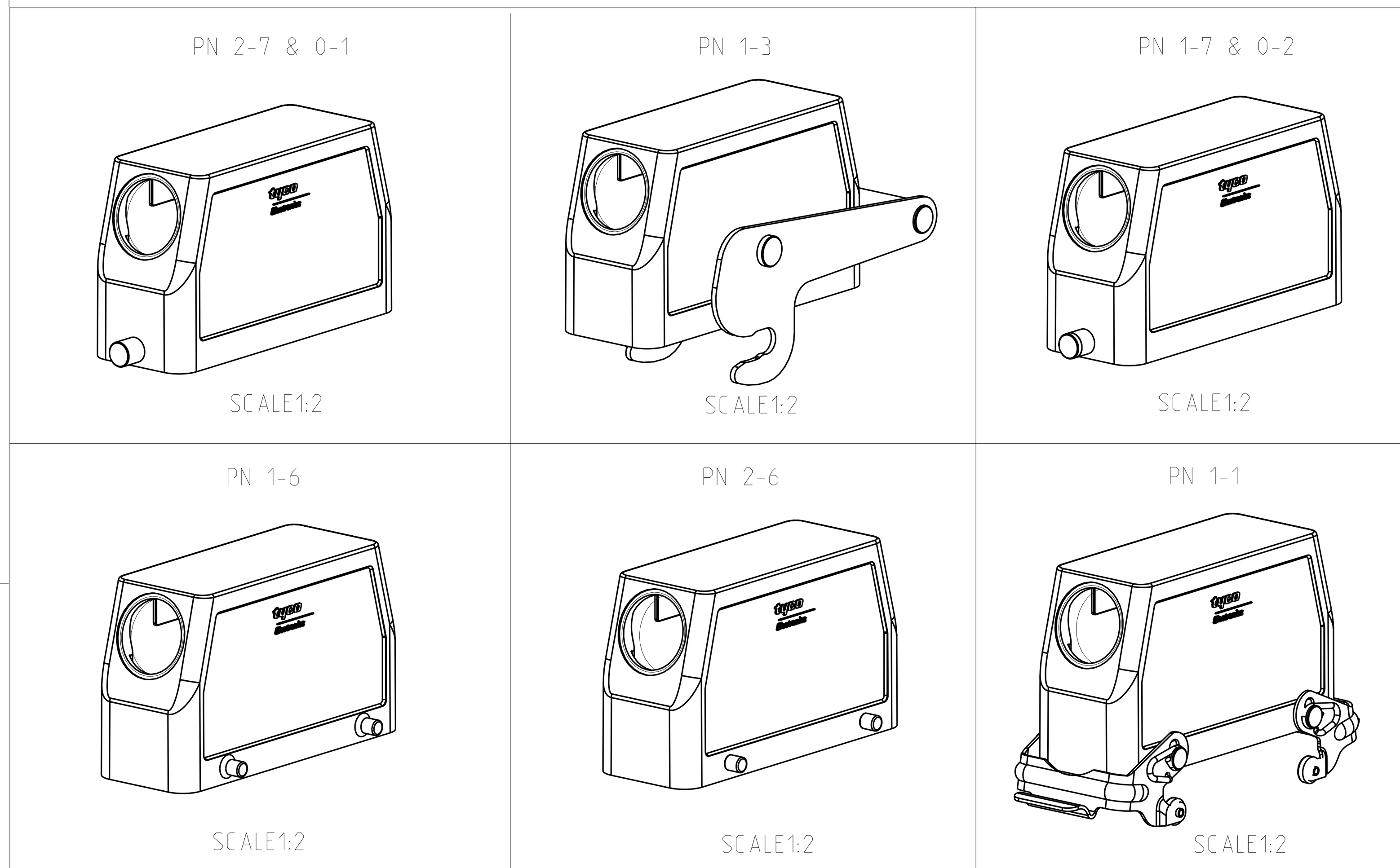

0-2	0-1	1-3	2-7	1-7	1-1	2-6	1-6	DESCRIPTION	MATERIAL	SURFACE	COLOR	ITEM NO	REMARKS
1								Hood HB	Aluminium	-	Grey	9	Neutral
	1							Hood HB-K	Aluminium	Aluminium oxide	Aluminum-colored	8	Special lacquer finish
		1						ZB-Central clip	Steel	Zinc plated	Blue	7	
	2		2					LB-Clip bolt	Stainless steel	Blank	-	6	
2				2				LB-Clip bolt	Steel	Zinc plated	Blue	5	
					2			VS-Side clip	Steel	Zinc plated	Blue	4	
						4		VS-Clip bolt	Stainless steel	Blank	-	3	
			1			1		HB-K Hood	Aluminium	Aluminium oxide	Black	2	
		1		1	1		1	HB Hood	Aluminium	-	Grey	1	

ORDERING TEXT
- HB.24.STS.1.21.G
- HB-K.24.STS.1.21.G
- HB.24.STS-VS.1.21.G
- HB.24.STS-GR.1.21.G
- HB-K.24.STS-GR.1.21.G
- HB-Z.24.STS-ZB.1.21.G
- HB-K.24.STS-GR.1.21.G
- HB.24.STS-GR.1.21.G

THIS DRAWING IS A CONTROLLED DOCUMENT FOR TYCO ELECTRONICS CORPORATION. IT IS SUBJECT TO CHANGE AND THE CONTROLLING ENGINEERING ORGANIZATION SHOULD BE CONTACTED FOR THE LATEST REVISION.

DIMENSIONS: mm

TOLERANCES UNLESS OTHERWISE SPECIFIED:
n.ISO 8015;
n.ISO 2768-mH-E;
n.DIN 16901-120
0 PLC ±
1 PLC ±
2 PLC ±
3 PLC ±
4 PLC ±
ANGLES ±

MATERIAL

FINISH

DWN Schneider 05.06.00
CHK Schweiger 05.06.00
APVD - -
PRODUCT SPEC 108-74001 108-74003
APPLICATION SPEC 114-74001 114-74004
WEIGHT

Tyco Electronics
Tyco Electronics.AMP.GmbH
D-53819.Neunkirchen.Germany

NAME
Hood
HB.24.STS.1.21.G

SIZE	CAGE CODE	DRAWING NO	RESTRICTED TO
A1	00779	C-1102316	-

CUSTOMER DRAWING | SCALE 1:1 | SHEET 1 OF 1 | REV A3