Identification	Cable entry	Part number Low construction	Part number High construction	Drawing Dimensions in mm
Han® EMC/B, Bulkhead mounted housings, Han-Easy Lock® 		09 62 810 0301		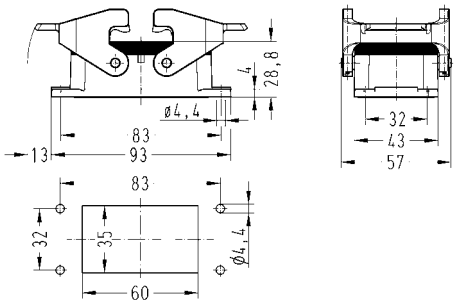 Panel cut out
Han® EMC/B, Surface mounted housings, side entry, Han-Easy Lock® 	2xM25 2xM32	19 62 810 1271	19 62 810 0272	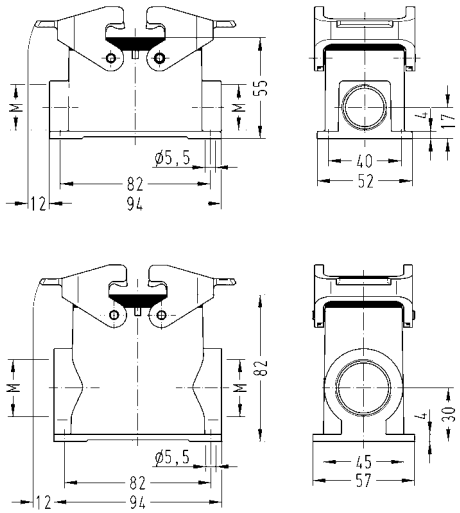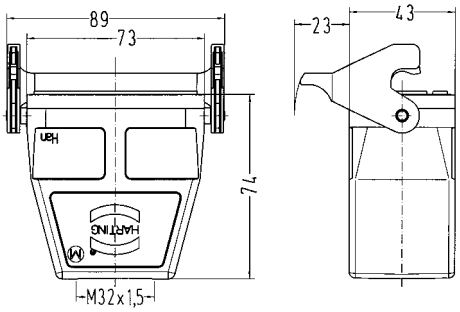
Han® EMC/B, Cable to cable housings, top entry, Han-Easy Lock® 	1xM32		19 62 810 0757