SHEET OF

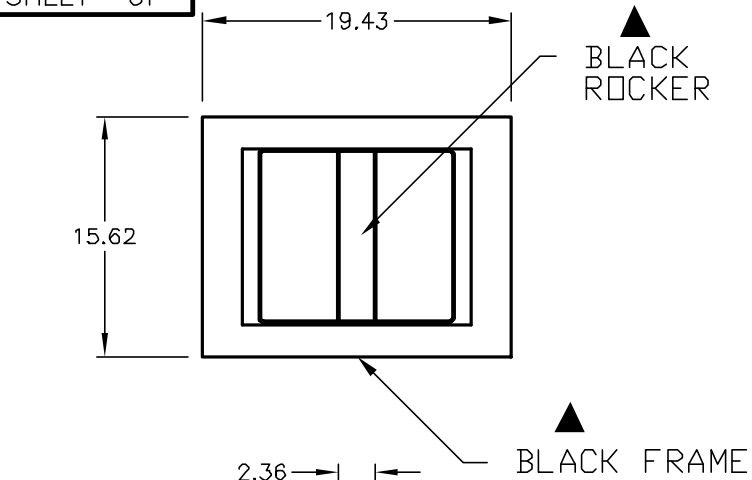

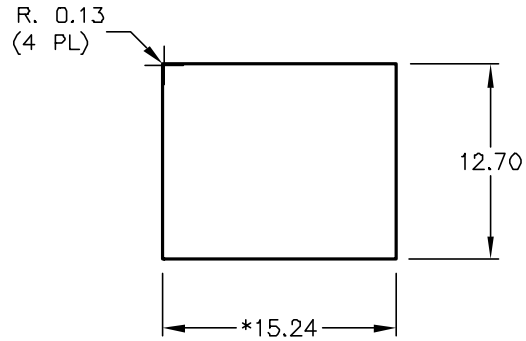

PANEL THICKNESS

1.52 TO 3.18

▲ * DIMENSION IS 15.75/15.88 FOR PANEL THICKNESS BETWEEN 1.52mm TO 3.18mm

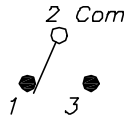

CIRCUIT: SPDT

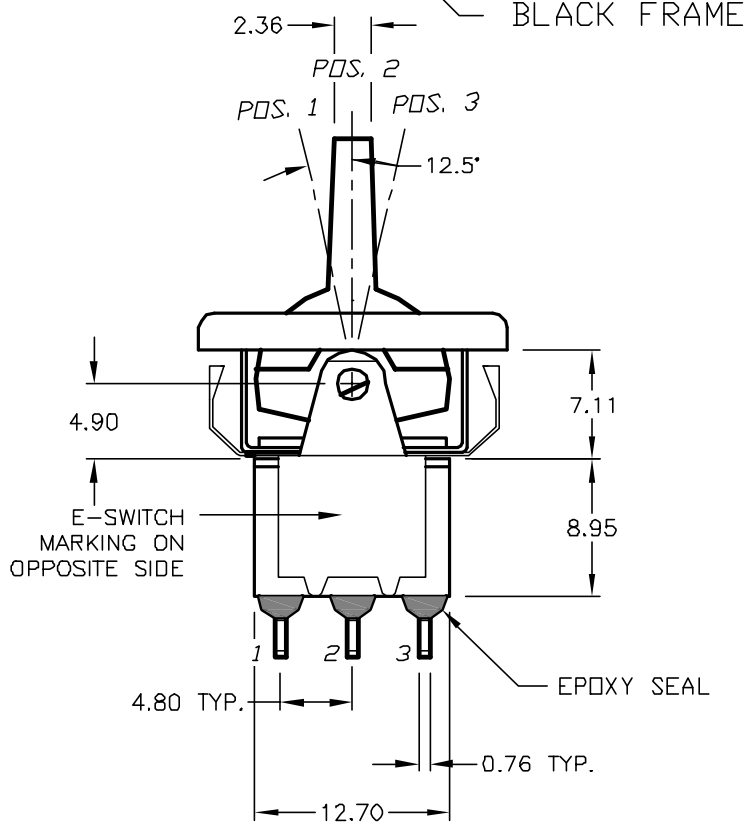

RECOMMENDED PANEL MOUNTING

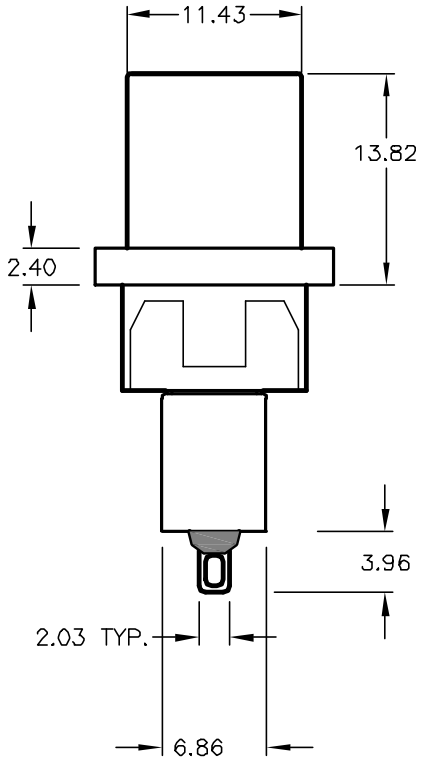

SWITCH FUNCTION		
POS. 1	POS. 2	POS. 3
(ON)	OFF	(ON)
2-3	OPEN	2-1

( )= Momentary

NOTES:

1. ALL DIMENSIONS IN MM
2. GENERAL TOLERANCE: X.X=±0.4
   X.XX=±0.25
3. TERM. NOS. FOR REF. ONLY
4. RATING: 0.4VA @20 max. (AC or DC)
5. ▲ MATERIAL: FIXED TERMINAL & MOVING CONTACT Copper Alloy w/Gold plate over Nickel plate.
6. CONTACT RESISTANCE: 10mILLI Ohms max initial @2-4VDC, 100mA for AG & AU
7. ELECTRICAL LIFE: 50,000 make-and-break cycles at full load.
8. INSULATION RESISTANCE: 1,000M Ohm min.
9. DIELECTRIC STRENGTH: 1000V RMS @sea level
10. OPERATING TEMP.: -30°C to 85°C

REV.	ECN No.	DESCRIPTION	DATE	CHKD
B	12263	REVISED AND REDRAWN	6/25/02	CB

THE INFORMATION CONTAINED IN THIS DOCUMENT IS PROPRIETARY TO E-SWITCH AND IS NOT TO BE COPIED OR TRANSFERRED

E-SWITCH®

TITLE 300 SP-4 R7 BLK M1 R E BLK (GOLD CONTACTS)

SCALE	DATE	DR	DWG	REV
2:1	6/25/02	CB	T314005	B