REV	ECN NO	REVISIONS	DRN	CKD	APR	DATE
A	——	NEW RELEASE	KLJ	M.O.		11/4/08

OPERATING CHARACTERISTICS AT 25°C AMBIENT					
CHARACTERISTICS	UNITS	VALUE			TEST CONDITIONS
		MIN	TYP	MAX	
LUMINOUS INTENSITY	mcd	0.4	1.1		I_F = 2 mA
FORWARD VOLTAGE	V	1.9	2.2		I_F = 2 mA
REVERSE CURRENT	µA			10	V_R = 5 V
DOMINANT WAVELENGTH	nm		569		
PEAK WAVELENGTH	nm		565		
VIEWING ANGLE (2 θ 1/2)	DEG		60		

ABSOLUTE MAXIMUM RATINGS AT 25°C AMBIENT	VALUE	UNITS
POWER DISSIPATION	20	mW
CONTINUOUS FORWARD CURRENT	7	mA
PEAK FORWARD CURRENT (0.01 ms PULSE WIDTH)	60	mA
DERATING LINEAR FROM 90°C	0.7	mA/°C
REVERSE VOLTAGE	5	V
SOLDERING TEMPERATURE (.063 in FROM BODY, FOR 5 SEC)	260	°C
OPERATING TEMPERATURE	-55 TO +100	°C
STORAGE TEMPERATURE	-55 TO +100	°C

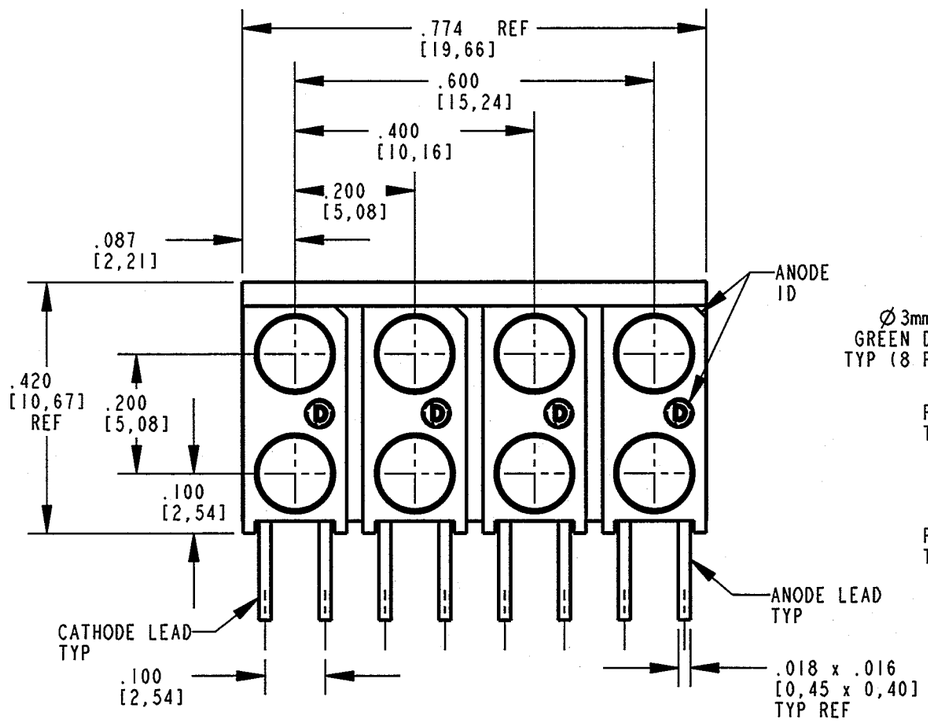

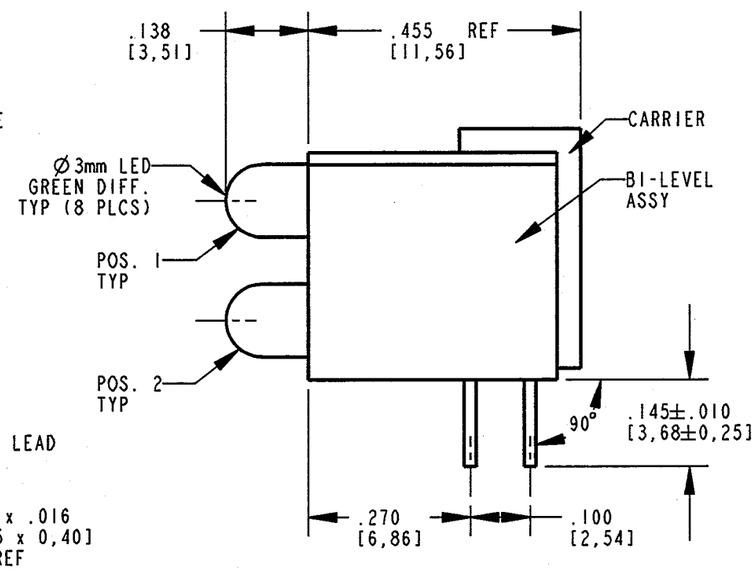

RoHS COMPLIANT 553-0222-204F

Part Numbers with the "F" suffix ending are RoHS Compliant. Packaging is marked with "RoHS Compliant" label or equivalent markings. Parts can be wave soldered, dip soldered or hand soldered using typical lead-free soldering process with max 260°C temp. for 5 sec.

NOTES:

1. LED LEAD DIMENSIONS SHOWN ARE MEASURED AT HOUSING EXIT.
2. LEADS TO FIT INTO HOLES SPACED AS PER PATTERN.
3. PIN NUMBERS FOR REFERENCE ONLY, DESIGNATION NON-EXISTENT ON PART.
4. PACKAGE PARTS IN TUBE WITH TWO (2) END PLUGS. (29 PCS PER TUBE).
5. DIALIGHT PART NUMBER: 553-0222-204F
6. THIS ASSEMBLY CONTAINS ELECTROSTATIC DISCHARGE SENSITIVE DEVICES (ESDS). MAINTAIN ALL PRECAUTIONARY MEASURES DURING ASSEMBLY, HANDLING, AND STORAGE IN ACCORDANCE WITH IPC-A-610.

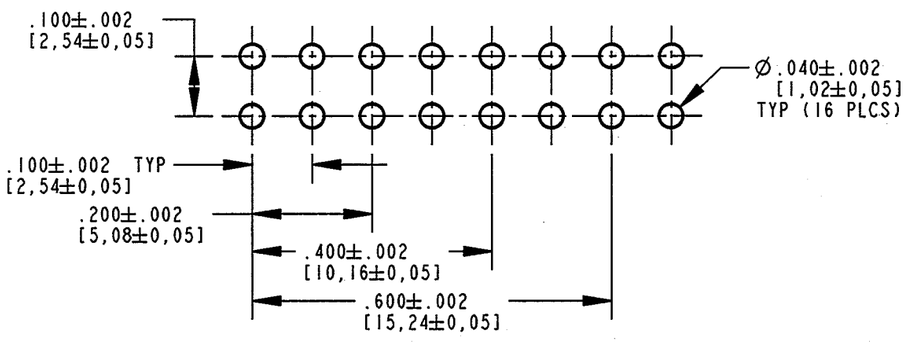

RECOMMENDED HOLE PATTERN GAUGE

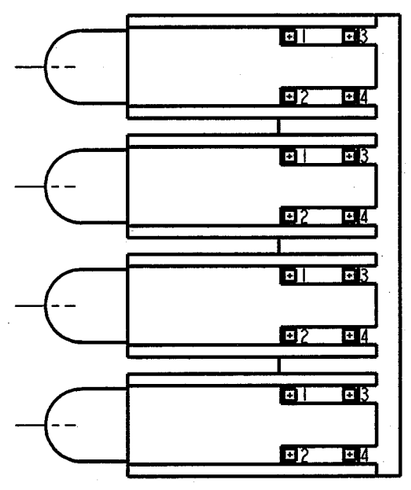

ATTENTION:
OBSERVE PRECAUTIONS FOR HANDLING ELECTROSTATIC SENSITIVE DEVICES

THIS DRAWING AND THE CONTENTS HEREIN ARE CONFIDENTIAL AND THE SOLE PROPERTY OF DIALIGHT. REPRODUCTION OF THIS DRAWING OR CONSTRUCTION OF ANY PARTS WITHIN THIS DRAWING ARE FORBIDDEN WITHOUT THE WRITTEN CONSENT OF DIALIGHT.

SCALE: 1.000
ALL DIM'S IN: INCHES (MM)
TOLERANCES: UNLESS OTHERWISE SPECIFIED
FRACTIONS: ±1/64
DECIMALS (.XX): ±.02
DECIMALS (.XXX): ±.015
ANGLES: ±3°
FINISH: -
FSCM 83330

DRAWING NUMBER C-17678
REV A
TITLE Ø3mm GREEN 4 x 2 CBI BLOCK; REVERSE POLARITY; RoHS COMPLIANT
MATERIAL -

Dialight
1501 ROUTE 34 SOUTH
FARMINGDALE, NJ 07727

SHEET 1 OF 1
FAMILY TABLE: