SHEET OF

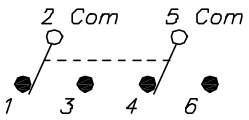

CIRCUIT: DPDT
CONTACT CONFIGURATION

SWITCH FUNCTION		
POS. 1	POS. 2	POS. 3
ON	NONE	ON
2-3,5-6	OPEN	2-1,5-4

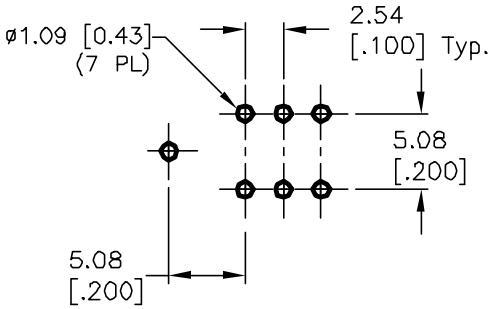

RECOMMENDED P.C.B. LAYOUT

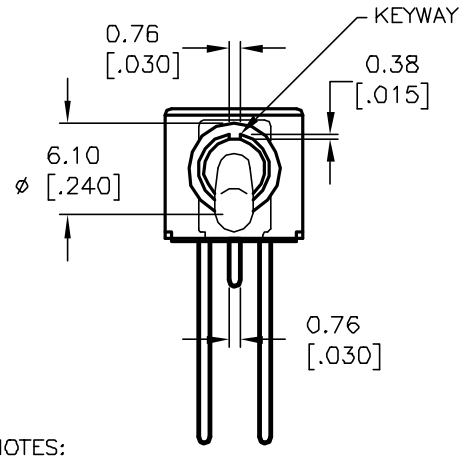

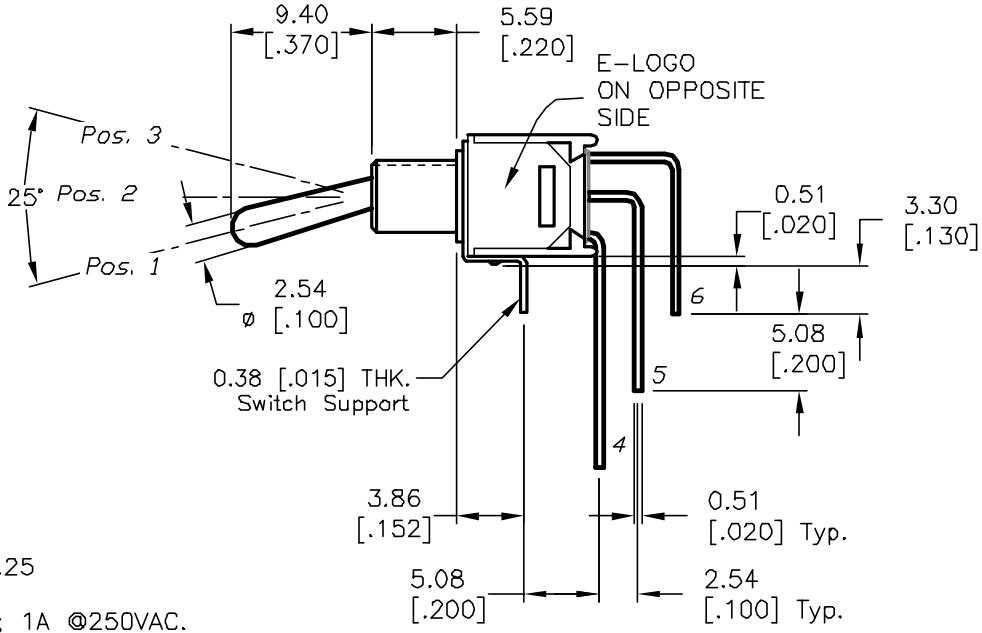

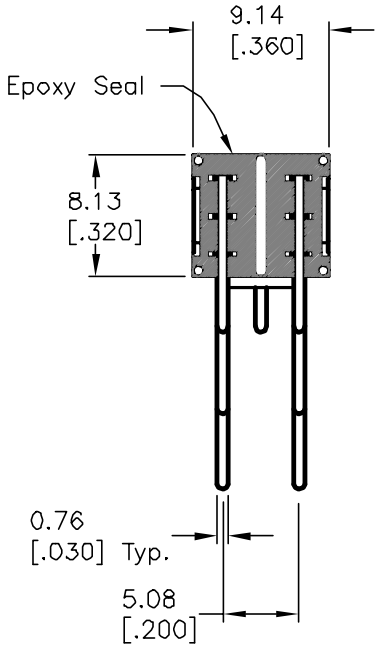

NOTES:

1. ALL DIMENSIONS IN MM [INCH]
2. GENERAL TOLERANCE: X.X=±0.4
   X.XX=±0.25
3. TERM. NOS. FOR REF. ONLY
4. RATING: 3A @120VAC or 28VDC; 1A @250VAC.
5. FIXED TERM. MOVING CONTACT:
   Copper Alloy w/Silver plating
6. ELECTRICAL LIFE: 30,000 make-and-break cycle at full load.
7. DIELECTRIC STRENGTH: 1,000 V RMS @sea level.
8. CONTACT RESISTANCE: 20mILLI-Ohms max
   Initial @2-4VDC
9. OPERATING TEMP.: -30°C to 85°C

REV.	ECN No.	DESCRIPTION	DATE	CHKD
A	12266	RELEASED	6/22/01	CJB

THE INFORMATION CONTAINED IN THIS DOCUMENT IS PROPRIETARY TO E-SWITCH AND IS NOT TO BE COPIED OR TRANSFERRED

E-SWITCH®

TITLE 200 MDP-1 T1 B4 M7 Q E

SCALE	DATE	DR	DWG	REV
2:1	6/26/02	CJB	T221040	A