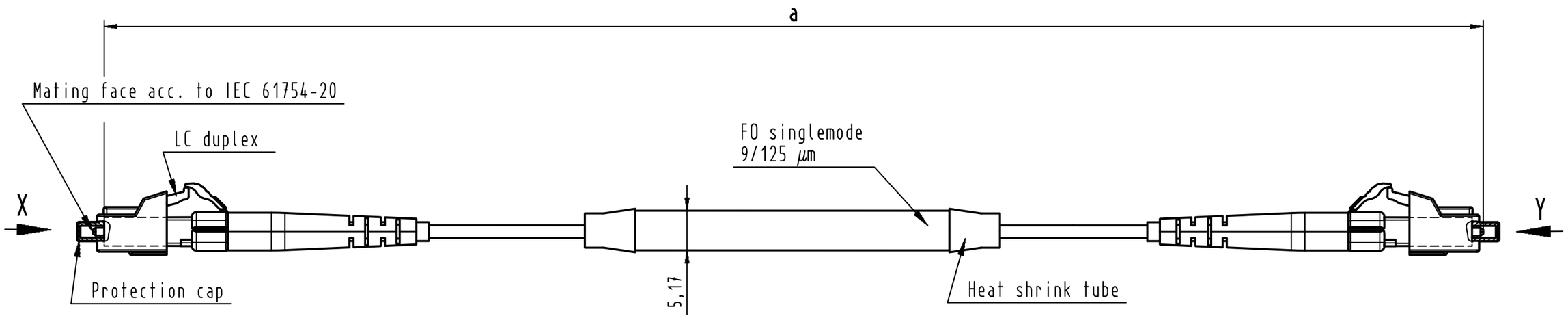

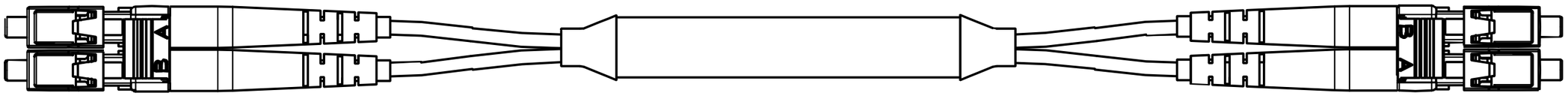

X
(without protection cap)

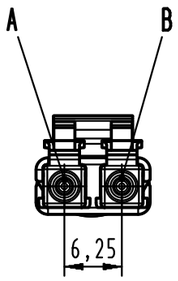

Loading-Plan

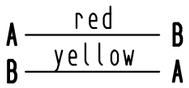

Y
(without protection cap)

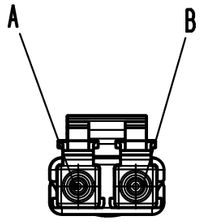

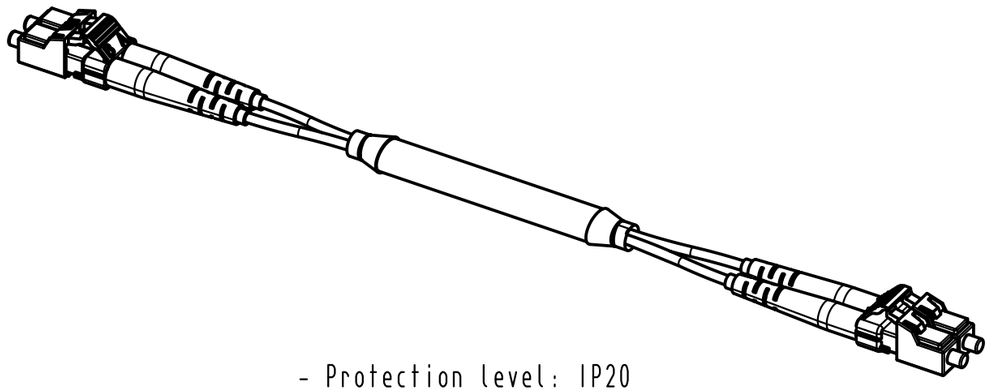

- Protection level: IP20
-Temperature range: -10°C ...+70°C

Cont. No.	Part-No.	Type of cable	Dim. a[mm]
10	33 01 241 010 0008	FO singlemode, 9/125 µm	10000 ± 100
9	33 01 241 009 0008	FO singlemode, 9/125 µm	9000 ± 90
8	33 01 241 008 0008	FO singlemode, 9/125 µm	8000 ± 80
7	33 01 241 007 0008	FO singlemode, 9/125 µm	7000 ± 70
6	33 01 241 006 0008	FO singlemode, 9/125 µm	6000 ± 60
5	33 01 241 005 0008	FO singlemode, 9/125 µm	5000 ± 50
4	33 01 241 004 0008	FO singlemode, 9/125 µm	4000 ± 40
3	33 01 241 003 0008	FO singlemode, 9/125 µm	3000 ± 30
2	33 01 241 002 0008	FO singlemode, 9/125 µm	2000 ± 20
1	33 01 241 001 0008	FO singlemode, 9/125 µm	1000 ± 15

For Information Only
-Won't be replaced when changed-

All Dimensions in mm
Original Size DIN A 3

Techn. Character.

Nicht tolerierte Maße/ *Free size tolerances*

	Dat.	Name	Maßstab/*Scale*
Detail.	30.09.10	MS	/
Insp.	30.09.10	RA	
Stand.			

DRS815A
Mod. | Dat. | Name

HARTING Electronics GmbH & Co. KG
D-32339 ESPELKAMP

FO jumper cable 2xLC duplex Single Mode 9/125 µm

TB 33 01 241 xxx 0008

Blatt/ *page* /

Sub.

Alle Rechte vorbehalten/ *All rights reserved*