THIS DRAWING IS UNPUBLISHED. RELEASED FOR PUBLICATION -.- .
© COPYRIGHT - BY TYCO ELECTRONICS CORPORATION. ALL RIGHTS RESERVED.

PART NUMBER	REV	FIRST USED
680195-1	H	122500-1
680195-2	H	565435-5
680195-3	H	354500-1

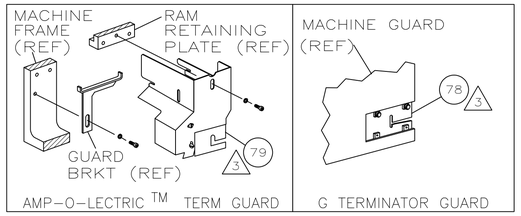

TERMINAL NAME: METRIMATE POWER CONTACT

PIN	SOCKET
213845	213847

CRIMPING DATA

PAD LTR	CRIMP HEIGHT	WIRE SIZE
A	.086 ±.002 [2.18 ±0.05mm]	12
B	.078 ±.002 [1.98 ±0.05mm]	14
C	.073 ±.002 [1.85 ±0.05mm]	16
D	NOT	USED

CRIMP	SIZE	TYPE	RANGE
WIRE	.130 [3.30mm]	F	16-14
INSUL	-	-	-

WIRE STRIP LENGTH	TERM APPL SPEC	FEED	APPL INSTRUCTION	SET UP GAGE	LAYOUT
.265-.295	114-10043	.750	408-8040	458637-1	L1671

REVISIONS

LOC	DIST	P	LTR	DESCRIPTION	DATE	DWN	APVD
A	66		H	ECR-07-013870	6-2007	MY	GB

-1	LEADMAKER	MECH POST FEED
-2	BENCH MODEL K	MECH PRE FEED
-3	BENCH MODEL G	MECH PRE FEED

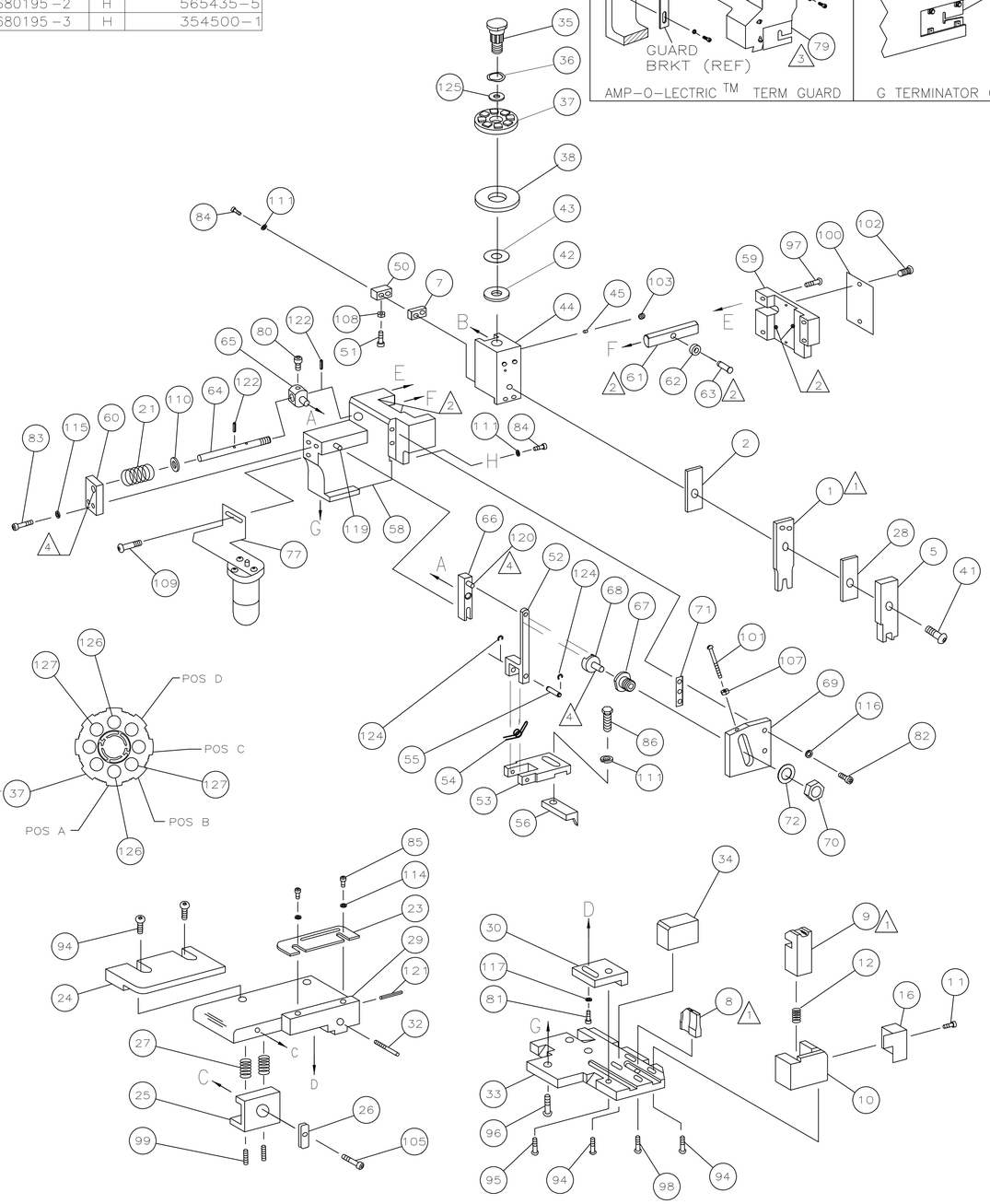

-3	-2	-1	U/M	PART NO	DESCRIPTION	ITEM NO
						129
2	2	2	-	9-354778-1	PIN, WIRE DISC (.2950)C	128
2	2	2	-	8-354778-0	PIN, WIRE DISC (.2895)B	127
2	2	2	-	6-354778-3	PIN, WIRE DISC (.2810)A	126
1	1	1	-	986950-1	WASHER, FLAT PRECISION	125
REF	REF	REF	-	21045-3	RING,RET "C"(Ø.187)FD FING PIN	124
						123
REF	REF	REF	-	5-21028-1	PIN,SLT SPR(Ø.125x.50)ADJ ROD	122
1	1	1	-	4-21028-0	PIN,SLT SPR(Ø.093x.75)ST GDE PL	121
REF	REF	REF	-	1-21030-1	PIN,DOWEL(Ø.187x.50)LEVER	120
REF	REF	REF	-	1-21030-6	PIN,DOWEL(Ø.187x1.25)HOUSING	119
						118
1	1	1	-	21024-5	WASHER, LOCK(#10)ADJ BLOCK	117
REF	REF	REF	-	21024-5	WASHER,LOCK(#10)ADJ PLATE	116
REF	REF	REF	-	21024-5	WASHER,LOCK(#10)FEED GDE ROD	115
2	2	2	-	21024-2	WASHER,LOCK(#4)FRONT STP GUIDE	114
						113
						112
4	4	4	-	21024-4	WASHER,LOCK(#8)STRIPPER	111
REF	REF	REF	-	21899-4	WASHER,FLAT(Ø5/16)SCREW ADJ	110
-	1	-	-	2-21002-6	SCR,BHC(10-32x.38)LUBE ASSY	109
1	1	1	-	21018-5	NUT,HEX(NO.6)HOLDDOWN	108
REF	REF	REF	-	21018-5	NUT,HEX(6-32)FEED ADJ	107
						106
1	1	1	-	22353-8	SCR,SHLD(Ø.187x.25)DRAG LEVER	105
						104
1	1	1	-	21009-2	SCR,SKT SET(1/4-20x.25 LW)RAM	103
2	2	2	-	21017-2	SCR,DRIVE(#2x.19)ID PLATE	102
REF	REF	REF	-	6-23715-5	SCR,PAN HD(6-32x1.50)FEED ADJ	101
1	1	1	-	461264-1	PLATE, IDENTIFICATION	100
2	2	2	-	5-21006-6	SCR,SET(10-32x.75)DRAG	99
1	1	1	-	22733-8	SCR,BHC(8-32x.38 LW)ANVIL	98
REF	REF	REF	-	2-21002-9	SCR,BHC(10-32x.75)CAP	97
REF	REF	REF	-	2-22733-8	SCR,BHC(1/4-20x.62)HOUSING	96
REF	REF	REF	-	2-21002-7	SCR,BHC(10-32x.50)SG ADJ BLOCK	95
6	6	6	-	2-21002-2	SCR,BHC(8-32x.50)TERM H DWN	94
						93
						92
1	1	1	-	1-21002-7	SCR,BHC(6-32x.38)CAM	91
						90
						89
						88
						87
1	1	1	-	2-22603-0	SCR,HEX HD(8-32x.31)FEED FINGER	86
2	2	2	-	1-21000-3	SCR,SHC(4-40x.25)F ST GUIDE	85
3	3	3	-	2-21000-7	SCR,SHC(8-32x.50)STRIPPER	84
REF	REF	REF	-	3-21000-7	SCR,SHC(10-32x.75)FEED ROD GD	83
REF	REF	REF	-	3-21000-6	SCR,SHC(10-32x.62)FD ADJ BLK	82
1	1	1	-	3-21000-4	SCR,SHC(10-32x.38)SG ADJ BL	81
REF	REF	REF	-	3-21000-4	SCR,SHC(10-32x.38)PIVOT BLK	80
-	REF	-	-	455749-1	GUARD, WINDOW	79
REF	-	-	-	679532-1	INSERT, GUARD	78
-	1	-	-	1-465184-0	LUBRICATOR ASSY	77
						76
						75
						74
						73
REF	REF	REF	-	458109-1	WASHER, SPECIAL	72
REF	REF	REF	-	690517-1	SPACER	71

QTY REQD PER ASSY — PARTS LIST

-3	-2	-1	U/M	PART NO	DESCRIPTION	ITEM NO
REF	REF	REF	-	22594-8	NUT,HEX(1/2-20)	70
REF	REF	REF	-	240628-1	PLATE, ADJUSTMENT	69
REF	REF	REF	-	240626-1	SHAFT, PIVOT	68
REF	REF	REF	-	240633-1	BUSHING	67
REF	REF	REF	-	455680-1	LEVER, INTERMEDIATE	66
REF	REF	REF	-	240629-1	BLOCK, PIVOT	65
REF	REF	REF	-	240632-2	SCREW, ADJ FEED ROD	64
REF	REF	REF	-	240659-3	PIN, CAM ROLLER	63
REF	REF	REF	-	240658-1	ROLLER, CAM	62
REF	REF	REF	-	454398-2	ROD, FEED	61
REF	REF	REF	-	454178-1	GUIDE, FEED ROD	60
REF	REF	REF	-	454220-1	CAP, RAM	59
REF	REF	REF	-	454485-1	HOUSING	58
						57
1	1	1	-	1-694433-6	PAWL, FEED	56
REF	REF	REF	-	240624-1	PIN, FEED FINGER	55
REF	REF	REF	-	691499-1	SPRING, FEED FINGER	54
REF	REF	REF	-	690541-1	HOLDER, FEED FINGER	53
REF	REF	REF	-	455679-2	LEVER, TERMINAL FEED ARM	52
1	1	1	-	811242-2	BUMPER, HOLDDOWN	51
1	1	1	-	690753-1	SPACER, TONKER	50
1	-	-	-	690602-6	CAM, PRE-FEED 1 5/8 ST	49
-	1	-	-	690602-5	CAM, PRE-FEED 1 1/8 ST	48
-	-	1	-	690501-4	CAM, POST-FEED 1 5/8 ST	47
1	1	1	-	459456-2	APPLICATOR, BASIC (SUBASSY)	46
1	1	1	-	690191-1	PLUG, NYLON	45
1	1	1	-	455673-1	RAM	44
1	1	1	-	690125-1	WASHER, LAMINATED	43
1	1	1	-	690124-1	WASHER, RAM	42
1	1	1	-	7-21002-9	BOLT, CRIMPER(5/16x1.00)	41
						40
						39
1	1	1	-	690223-2	SPACER, INSULATION DISC	38
1	1	1	-	354777-1	WIRE DISC, PLASTIC	37
1	1	1	-	22480-5	WASHER, SPRING	36
1	1	1	-	690212-1	POST, RAM	35
1	1	1	-	690786-5	SUPPORT, TERMINAL	34
REF	REF	REF	-	455675-1	PLATE, BASE	33
1	1	1	-	690432-3	SCREW, ADJUSTMENT	32
						31
REF	REF	REF	-	455689-1	BLOCK, STRIP GUIDE ADJ	30
1	1	1	-	458144-1	PLATE, STRIP GUIDE	29
1	1	1	-	1-455888-6	SPACER, FRONT SHEAR DEP	28
2	2	2	-	1-22284-0	SPRING, DRAG	27
1	1	1	-	356835-1	LEVER, DRAG RELEASE	26
1	1	1	-	240792-1	DRAG, TERMINAL	25
1	1	1	-	5-690504-8	GUIDE, STRIP (REAR)	24
1	1	1	-	690438-1	GUIDE, STRIP (FRONT)	23
-	-	1	-	690472-2	STRIPPER	22
REF	REF	REF	-	4-22284-9	SPRING, FEED RETURN	21
						20
1	1	-	-	691353-1	STRIPPER	19
						18
						17
1	1	1	-	691667-3	GUARD, CHIP (FRONT)	16
						15
						14
						13
1	1	1	-	3-22280-3	SPRING, SHEAR	12
1	1	1	-	690461-2	STOP, SHEAR	11
1	1	1	-	1-690459-0	HOLDER, SHEAR (FRONT)	10
1	1	1	-	454276-5	SHEAR, FLOAT (FRONT)	9
1	1	1	-	7-683403-8	ANVIL	8
1	1	1	-	6-240641-4	SPACER, DEPRESSOR (REAR)	7
						6
1	1	1	-	1-455889-8	DEPRESSOR, SHEAR (FRONT)	5
						4
						3
1	1	1	-	455888-1	SPACER, CRIMPER	2
1	1	1	-	1-456410-6	CRIMPER, WIRE	1

QTY REQD PER ASSY — PARTS LIST

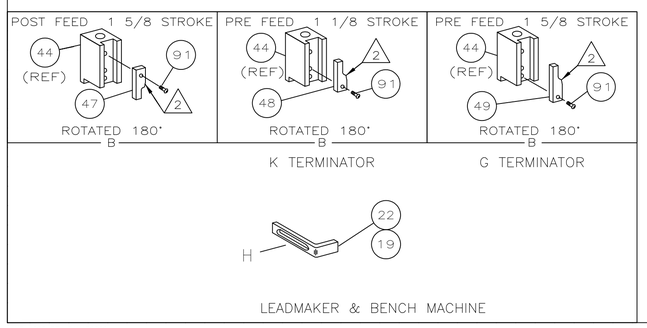

1. RECOMMENDED SPARE PARTS.
2. GREASE LIGHTLY.
3. GUARD MUST BE IN PLACE WHEN OPERATING APPLICATOR IN A BENCH MACHINE.
4. LUBRICATE DAILY USING NO. 20 MACHINE OIL.
5. ITEMS WITH QTY OF REF SPECIFIED (EXCEPT ITEMS 78 AND 79) ARE USED ON ITEM 46.

THIS DRAWING IS A CONTROLLED DOCUMENT.

DIMENSIONS: INCHES

TOLERANCES UNLESS OTHERWISE SPECIFIED: 0 PLC ± - ; 1 PLC ± - ; 2 PLC ± - ; 3 PLC ± - ; 4 PLC ± - ; ANGLES ± -

MATERIAL -

FINISH -

DWN J.BAKER 9/13/95
CHK C.ERISMAN 9/15/95
APVD A BEDDICK 9/15/95

PRODUCT SPEC —

APPLICATION SPEC —

WEIGHT —

Tyco Electronics

Tyco Electronics Corporation
Harrisburg, PA 17105-3608

NAME SIDE FEED HDM APPLICATOR

SIZE A1 | CAGE CODE 00779 | DRAWING NO C-680195 | RESTRICTED TO —

CUSTOMER DRAWING | SCALE — | SHEET 1 OF 1 | REV H