PART NUMBER	REV	FIRST USED
1385494 –1	B	122500–1
1385494 –2	B	565435–5
1385494 –3	B	354500–1

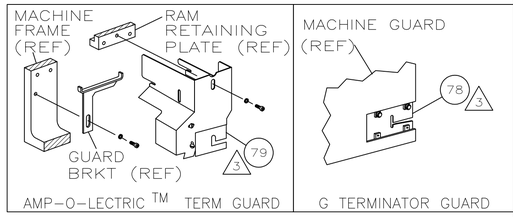

TERMINAL NAME: LATCH

AMP TERM PN	MFR TERM PN
1572172	A2542–TP

INTERNATIONAL IMPORTERS TERMINAL — AMP CRIMP SPECS

PAD LTR	CRIMP HEIGHT	WIRE SIZE
A	.034 ±.002 [0.86 ±0.05mm]	20
B	.030 ±.002 [0.76 ±0.05mm]	22
C	.027 ±.002 [0.69 ±0.05mm]	24
D	.025 ±.002 [0.64 ±0.05mm]	27

CRIMP	SIZE	TYPE	RANGE
WIRE	.055 [1.40mm]	F	27–20
INSUL	.062 [1.57mm]	0	.047 MAX

WIRE STRIP LENGTH	TERM APPL SPEC	FEED	APPL INSTRUCTION	SET UP GAGE	LAYOUT
.126	NONE	.197	408–8040	458637–1	L2728

USED ON —

–1	LEADMAKER	AIRFEED
–2	BENCH MODEL K	AIRFEED
–3	BENCH MODEL G	AIRFEED

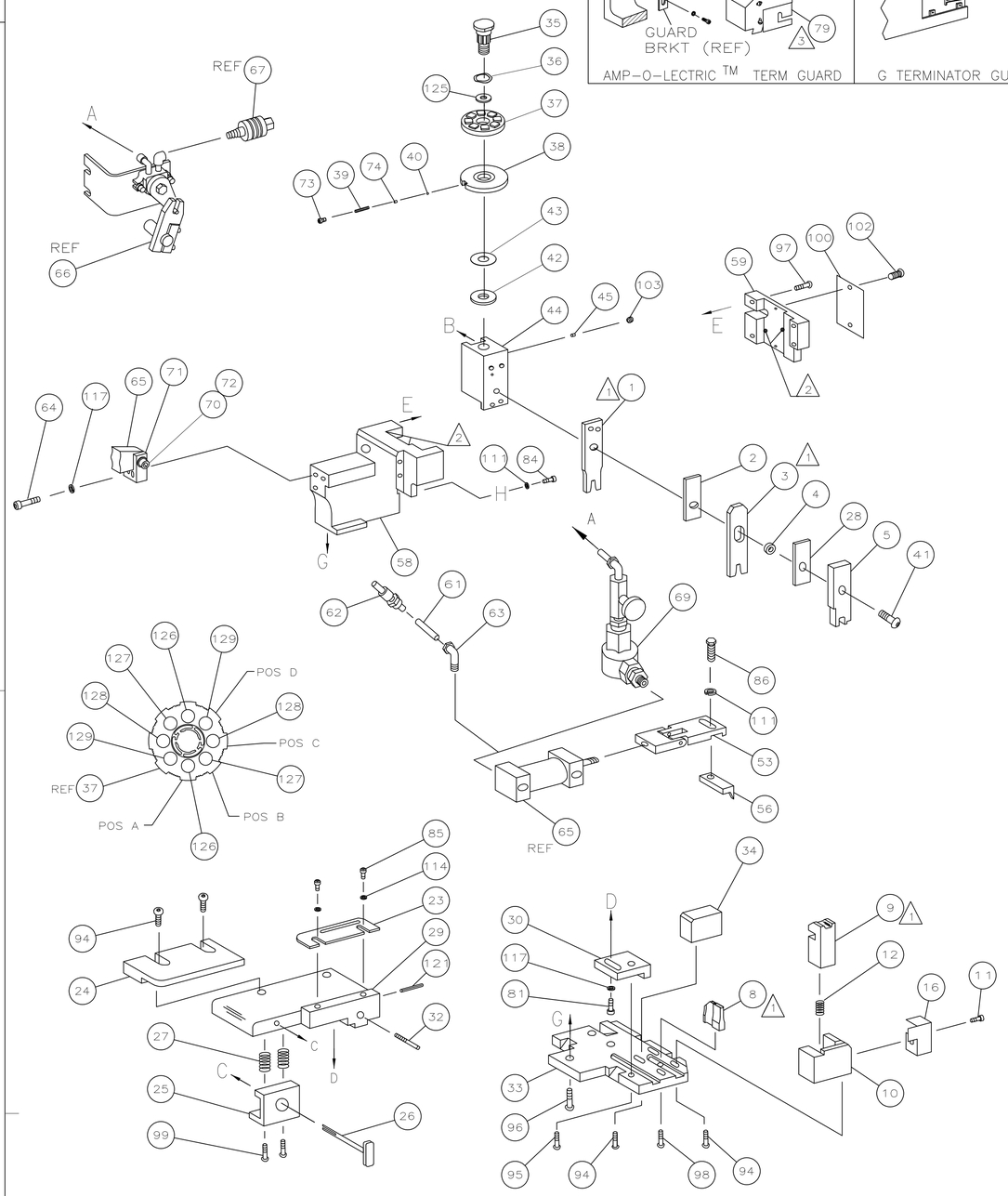

–3	–2	–1	U/M	PART NO	DESCRIPTION	ITEM NO
2	2	2	–	6–354779–4	PIN, WIRE DISC (.3310)D	129
2	2	2	–	5–354779–8	PIN, WIRE DISC (.3280)C	128
2	2	2	–	5–354779–2	PIN, WIRE DISC (.3250)B	127
2	2	2	–	4–354779–4	PIN, WIRE DISC (.3210)A	126
1	1	1	–	986950–1	WASHER, FLAT PRECISION	125
1	1	1	–	217238–1	GENERAL INSTRUCTION PACKAGE	124
1	1	1	–	4088040	SF APPL INST 408–8040	123
						122
1	1	1	–	4–21028–0	PIN,SLT SPR(Ø.093x.75)ST GDE PL	121
						120
						119
						118
3	3	3	–	21024–5	WASHER, LOCK(#10)ADJ BLOCK	117
						116
						115
2	2	2	–	21024–2	WASHER,LOCK(#4)FRONT STP GUIDE	114
						113
						112
2	2	2	–	21024–4	WASHER,LOCK(#8)STRIPPER	111
						110
						109
						108
						107
						106
						105
						104
1	1	1	–	21009–2	SCR,SKT SET(1/4–20x.25 LW)RAM	103
2	2	2	–	21017–2	SCR,DRIVE(#2x.19)ID PLATE	102
						101
1	1	1	–	461264–1	PLATE, IDENTIFICATION	100
2	2	2	–	3–21002–0	SCR,BHC(10–32x.88)DRAG	99
1	1	1	–	22733–8	SCR,BHC(8–32x.38 LW)ANVIL	98
4	4	4	–	2–21002–9	SCR,BHC(10–32x.75)CAP	97
3	3	3	–	2–22733–8	SCR,BHC(1/4–20x.62)HSG	96
1	1	1	–	2–21002–7	SCR,BHC(10–32x.50)SG ADJ BLK	95
6	6	6	–	A 2–21002–2	SCR,BHC(8–32x.50)TERM H DWN	94
						93
						92
						91
						90
						89
						88
						87
1	1	1	–	2–22603–1	SCR,HEX HD(8–32x.38)FEED FINGER	86
2	2	2	–	1–21000–3	SCR,SHC(4–40x.25)FR ST GUIDE	85
1	1	1	–	2–21000–7	SCR,SHC(8–32x.50)STRIPPER	84
						83
						82
1	1	1	–	3–21000–4	SCR,SHC(10–32x.38)SG ADJ BL	81
						80
–	1	–	–	462992–7	GUARD ASSY	79
REF	–	–	–	679532–1	INSERT, GUARD	78
						77
						76
						75
1	1	1	–	690603–1	SPRING, ASSIST	74
1	1	1	–	23030–1	SCR,SHC(6–32x.25 SL)INS DISC	73
1	1	1	–	3–21001–5	SCR,SHC(3/8–16X1.00)AIR FEED	72
1	1	1	–	459610–1	MOUNT, FEED BRACKET	71

QTY REQD PER ASSY — PARTS LIST

–3	–2	–1	U/M	PART NO	DESCRIPTION	ITEM NO
1	1	1	–	21024–8	WASHER, LOCK 3/8	70
–	1	–	–	692655–5	AIR FEED VALVE ASSY	69
						68
–	REF	–	–	24042–2	VALVE, SHUT OFF	67
–	REF	–	–	692655–6	AIR FEED VALVE ASSY	66
1	1	1	–	461065–1	AIR FEED ASSY (1 INCH)	65
2	2	2	–	3–21000–7	SCR,SHC(10–32x.75)AIR ASSY	64
1	–	1	–	980285–2	ELBOW, SWIVEL 1/8 NPT – 1/4 T	63
1	–	1	–	23238–1	QUICK DISCONNECT	62
21.00	–	21.00	IN	27319–4	TUBING, POLY–FLO Ø.25	61
						60
1	1	1	–	454220–1	CAP, RAM	59
1	1	1	–	454485–1	HOUSING	58
						57
1	1	1	–	694433–8	PAWL, FEED	56
						55
						54
1	1	1	–	461062–1	FEED FINGER ASSY	53
						52
						51
						50
						49
						48
						47
						46
1	1	1	–	690191–1	PLUG, NYLON	45
1	1	1	–	455673–1	RAM	44
1	1	1	–	690125–1	WASHER, LAMINATED	43
1	1	1	–	690124–1	WASHER, RAM	42
1	1	1	–	7–21002–9	BOLT, CRIMPER(5/16x1.00)	41
1	1	1	–	23241–6	BALL, STEEL	40
1	1	1	–	690170–1	SPRING, COMPRESSION	39
1	1	1	–	690142–1	DISC, INSULATION	38
1	1	1	–	354777–1	WIRE DISC, PLASTIC	37
1	1	1	–	22480–5	WASHER, SPRING	36
1	1	1	–	690212–1	POST, RAM	35
1	1	1	–	690786–3	SUPPORT, TERMINAL	34
1	1	1	–	455675–1	PLATE, BASE	33
1	1	1	–	690432–3	SCREW, ADJUSTMENT	32
						31
1	1	1	–	455689–1	BLOCK, STRIP GUIDE ADJ	30
1	1	1	–	455671–6	PLATE, STRIP GUIDE	29
1	1	1	–	1–455888–0	SPACER, FRONT SHEAR DEP	28
2	2	2	–	1–22284–0	SPRING, DRAG	27
1	1	1	–	690546–1	LEVER, DRAG RELEASE	26
1	1	1	–	240792–1	DRAG, TERMINAL	25
1	1	1	–	9–690504–5	GUIDE, STRIP (REAR)	24
1	1	1	–	690438–1	GUIDE, STRIP (FRONT)	23
–	–	1	–	690472–2	STRIPPER	22
						21
						20
1	1	–	–	691353–1	STRIPPER	19
						18
						17
1	1	1	–	318563–1	GUARD, CHIP, FRONT	16
						15
						14
						13
1	1	1	–	3–22280–3	SPRING, SHEAR	12
1	1	1	–	690461–1	STOP, SHEAR	11
1	1	1	–	690459–1	HOLDER, SHEAR (FRONT)	10
1	1	1	–	462006–1	SHEAR, FLOAT (FRONT)	9
1	1	1	–	7–805887–5	ANVIL	8
						7
						6
1	1	1	–	2–455889–0	DEPRESSOR, SHEAR (FRONT)	5
1	1	1	–	238011–6	SPACER, BLOCK CRIMPER	4
1	1	1	–	4–456135–1	CRIMPER, INSULATION	3
1	1	1	–	455888–6	SPACER, CRIMPER	2
1	1	1	–	5–456402–2	CRIMPER, WIRE	1

QTY REQD PER ASSY — PARTS LIST

1. RECOMMENDED SPARE PARTS.
2. GREASE LIGHTLY.
3. GUARD MUST BE IN PLACE WHEN OPERATING APPLICATOR IN A BENCH MACHINE.
4. SEE DRAWING FOR COMPONENTS

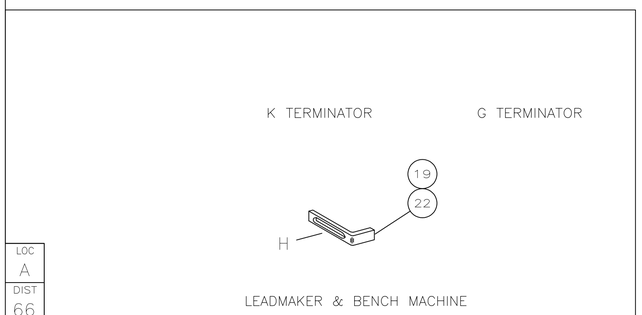

P	LTR	REVISION RECORD	DATE	DWN	APVD
	B	ECR–12–004997	3–2012	MY	GB

DIMENSIONS: INCHES
TOLERANCES UNLESS OTHERWISE SPECIFIED: 0 PLC ± – ; 1 PLC ± – ; 2 PLC ± .25 ; 3 PLC ± – ; 4 PLC ± –
ANGLES ± –
SURFACE TEXTURE –√

DWN R. KNEPPER 09OCT02	MATERIAL – –	HEAT TREAT – –	
CHK –			
APVD T.ELBIN 09OCT02	TE Connectivity		
NAME SIDE FEED HDM APPLICATOR			
SCALE –	SIZE A1	DRAWING NO 1385494	SHEET 1 OF 1	REV B

CUSTOMER ACCESSIBLE PRODUCTION DRAWING

LOC A DIST 66

3308–8 (3/11)

DIMENSIONING AND TOLERANCING PER ASME Y14.5M (ISO STANDARDS)
THIS DRAWING IS A CONTROLLED DOCUMENT.
DWG NO 1385494
THIS INFORMATION IS CONFIDENTIAL AND PROPRIETARY TO TYCO ELECTRONICS CORPORATION AND ITS WORLDWIDE SUBSIDIARIES AND AFFILIATES (COLLECTIVELY, "TE"). IT MAY BE USED BY TE PERSONNEL AND THOSE OTHERS AUTHORIZED BY TE, WITHOUT AUTHORIZATION FROM TE (www.TE.com).