THIS COPY IS PROVIDED ON A RESTRICTED BASIS AND IS NOT TO BE USED IN ANY WAY DETRIMENTAL TO THE INTERESTS OF PANDUIT CORP.

PANDUIT PART NUMBER	WEIGHT
FHDEC2X2	0.03 LB/EACH (15g/EACH)

C

NOTES:

1. SEE CURRENT CATALOG FOR ADDITIONAL PART SUFFIXES TO INDICATE COLOR AND/OR PACKAGE QUANTITY.
2. DIMENSIONS IN PARENTHESES ARE IN METRIC.

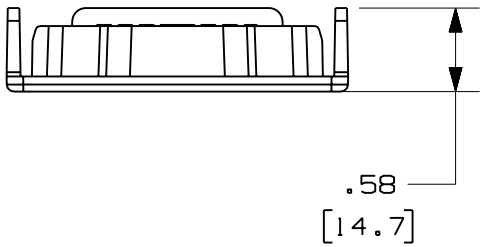

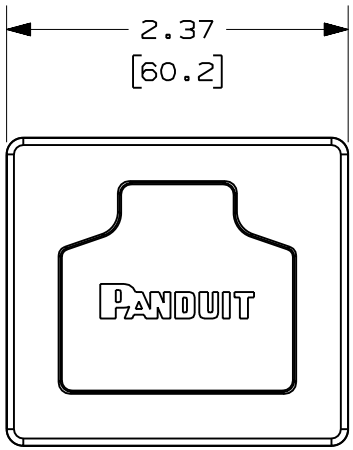

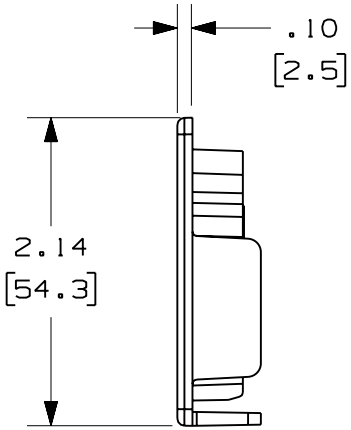

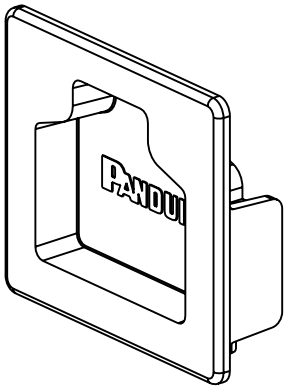

ENG. REF.: D38390BB_DC_FHDEC2X2_01.prt

CAD FILENAME/LAYERS A FHDEC2X2.pdf

PANDUIT CORP TINLEY PARK, ILLINOIS

PANDUCT TYPES H AND HS 2x2 WIRING DUCT AND FIBERRUNNER 2x2 END CAP (FHDEC2X2)

B CUSTOMER DRAWING

UNLESS OTHERWISE SPECIFIED, DIMENSIONAL TOLERANCES ARE:
(.X) ± (.XXX) ±
(.XX) ±.03 (.8) ANGLES ±

UNLESS OTHERWISE SPECIFIED, ALL DIMENSIONS ARE GIVEN IN INCHES, THIRD ANGLE PROJECTION.

REV	DATE	BY	CHK	DESCRIPTION	ECN	R	CUST	SUP	GMBH
-	--------	---	--	C. REVISED PART WEIGHT	--------	--	--		
1	6-21-06	DTP	RN	B. REVISED DRAWING TITLE A. REVISED CAD FILE NAME	38390-02	RN	RN		
R	2-21-02	JHNU	DJWA	RELEASED TO PRODUCTION	38390-02	HIW	HIW		

DRAWN BY JHNU
DATE 2-21-02
CHK'D DJWA
MAT'L: ABS
SCALE NONE
DRAWING NO. 38390-02
DWG A
SIZE