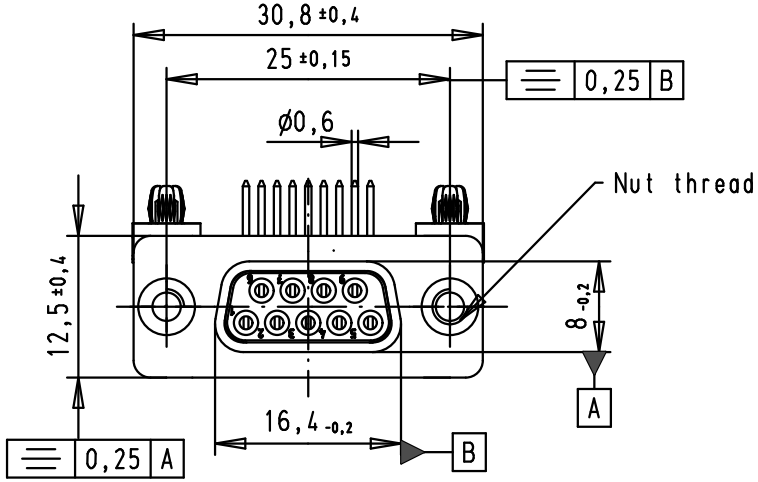

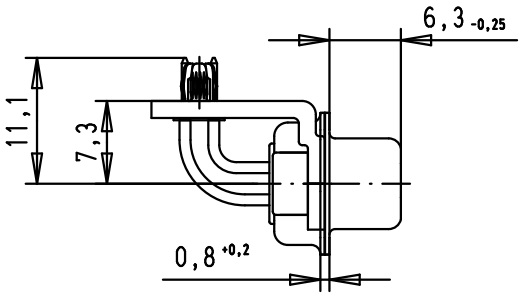

SPECIFICATION

Performance level	PL2
Filter type	C
Capacitance	47pf±20%
Working Voltage	100v
Current Rating	7,5A
Insulation Resistance	>1GΩ

FREQUENCY (MHz)	ATTENUATION dB
5	-
10	-
50	-
100	-
500	30dB
1000	35dB

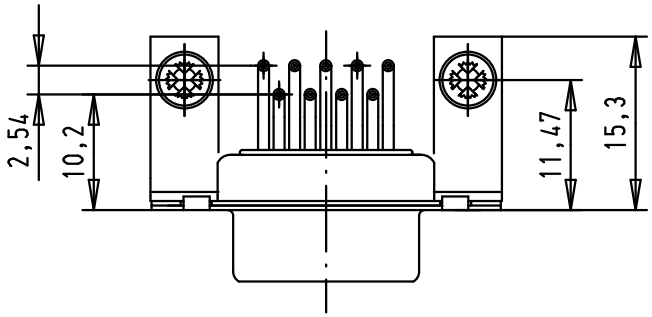

PCB Layout, Component side, thickness 1.6 mm

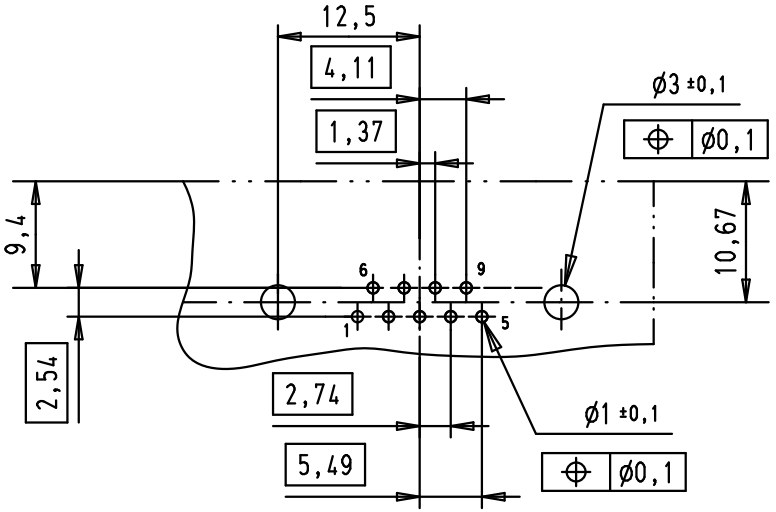

			36283	12/01/12	SD
09641147213	M3		33231	07/10/05	JMDR
09641147212	UNC 4-40		31058	8-JUL-02	CV
Part number	Nut thread		Mod.	Dat.	Name

	Dat.	Name
Detail.	8-JUL-02	CV
Insp.	12/01/12	JB
Stand.		

All Dim. in mm
Orig. Size DIN A 4

D-Sub, female, angled, 9 Poles, solder pins, board-locks and clinch-nuts

Ma?Mstab/ *Scale* 1.5:1

HARTING EURL
F-95972 Paris

TB 0964114721x

Sub.

Blatt/ *Page* 1/4